COMMANDES CASINO REF. 173B - C - M - N - NB + REF. 174C - 175 C

REGIPLAST

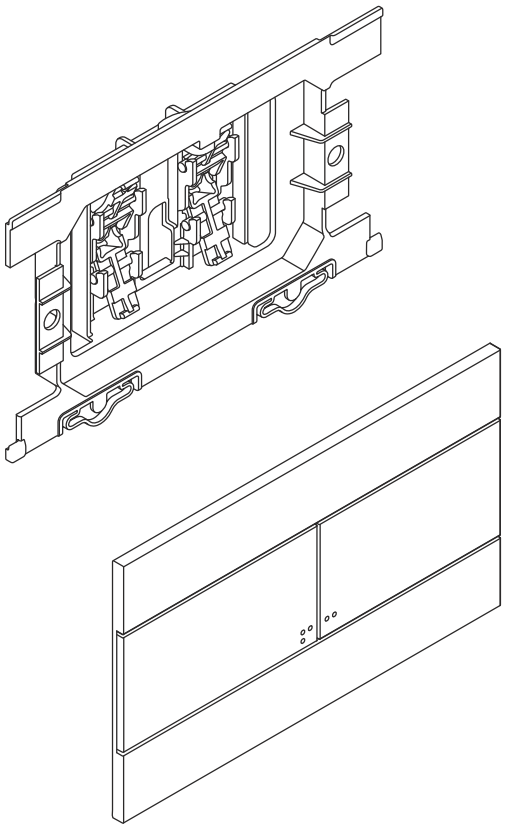

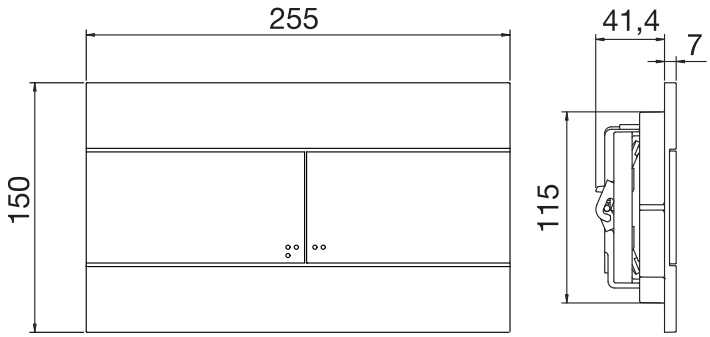

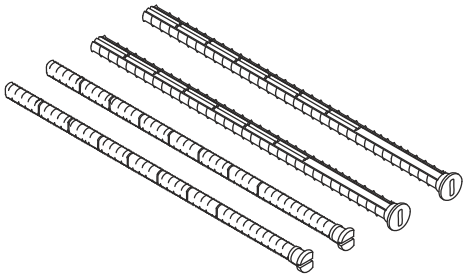

(dimensions in millimeters)

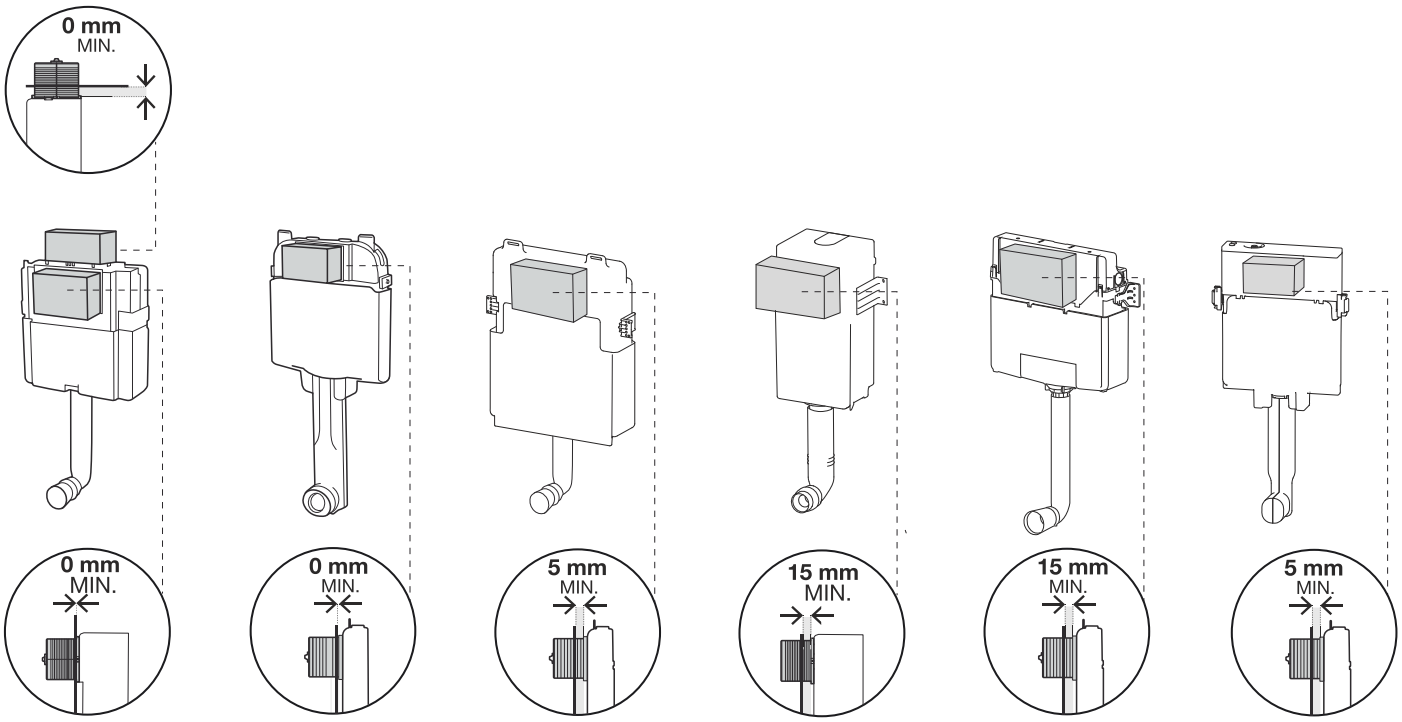

COMMANDES CASINO REF. 173B - C - M - N - NB + REF. 174C - 175 C

REGIPLAST

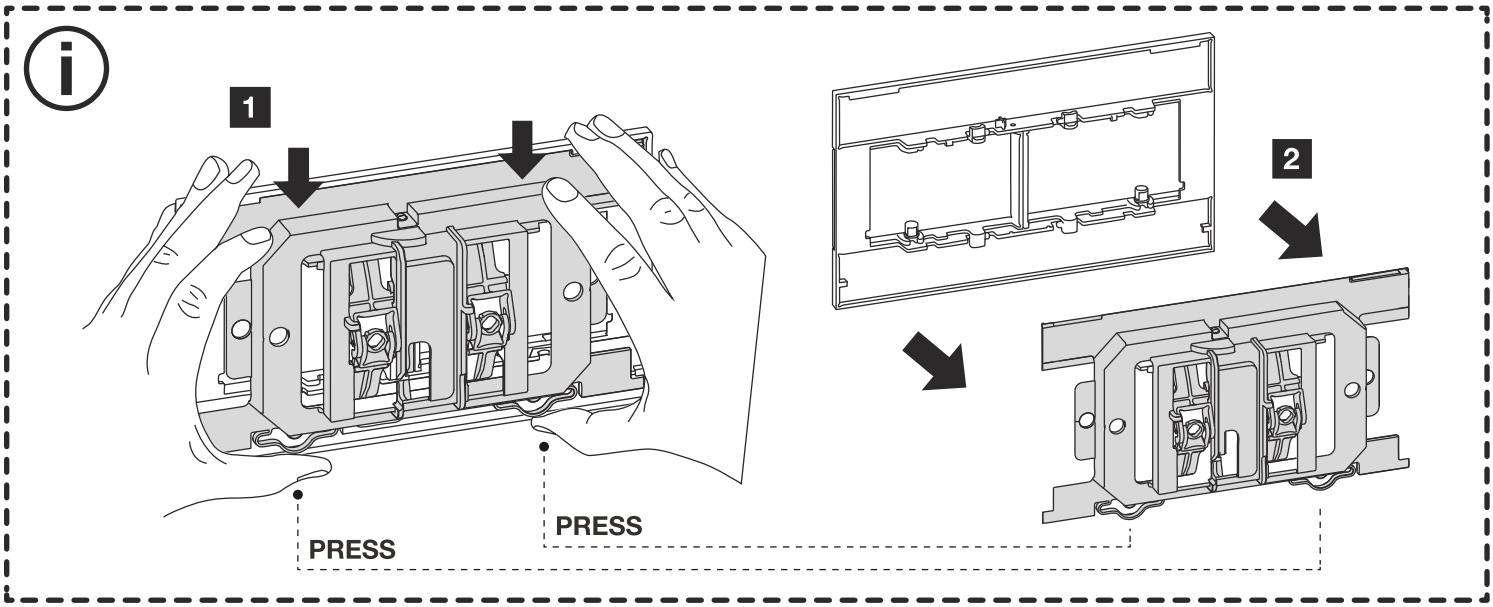

1

FRONT

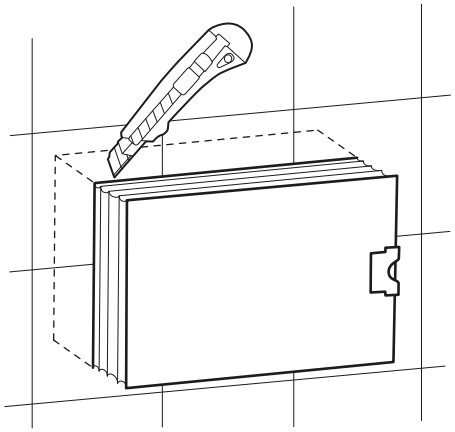

TOP

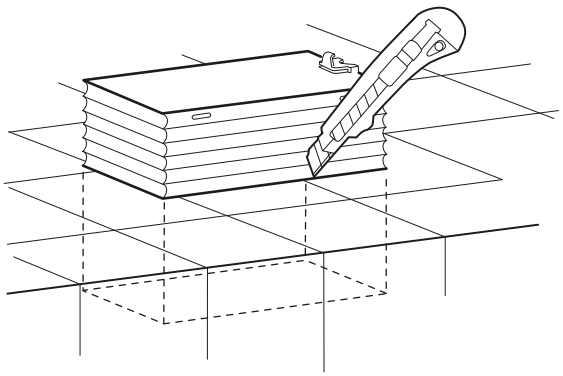

2

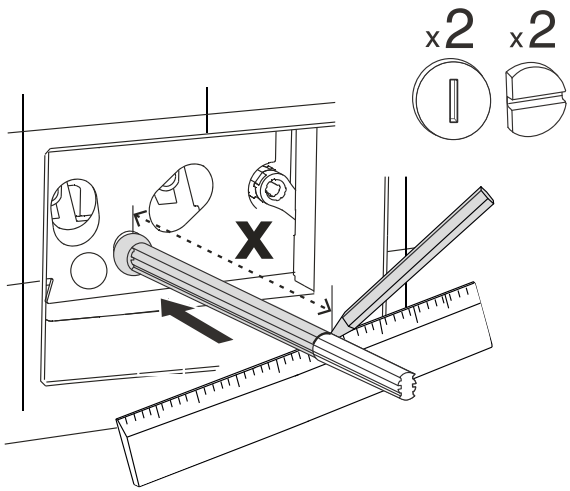

3

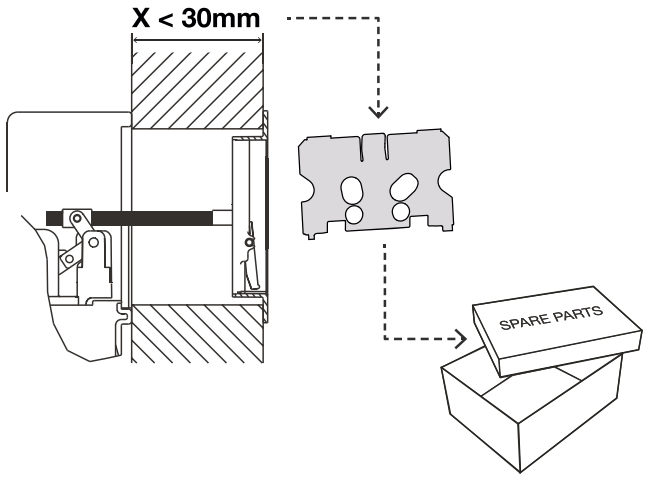

REGIPLAST

4

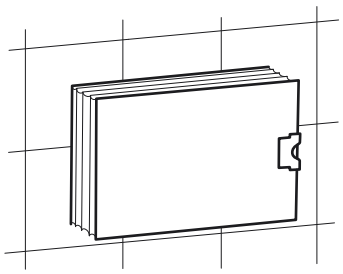

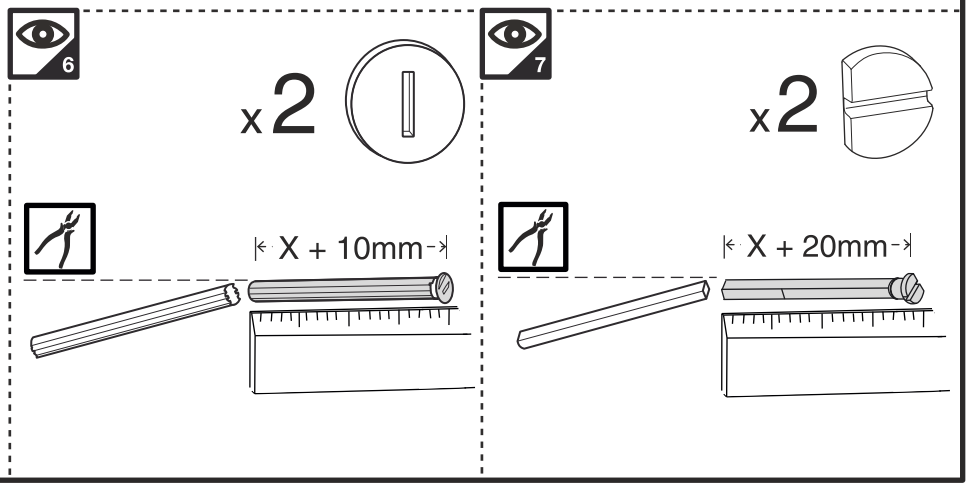

4

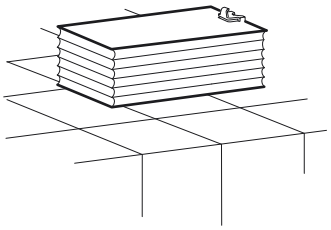

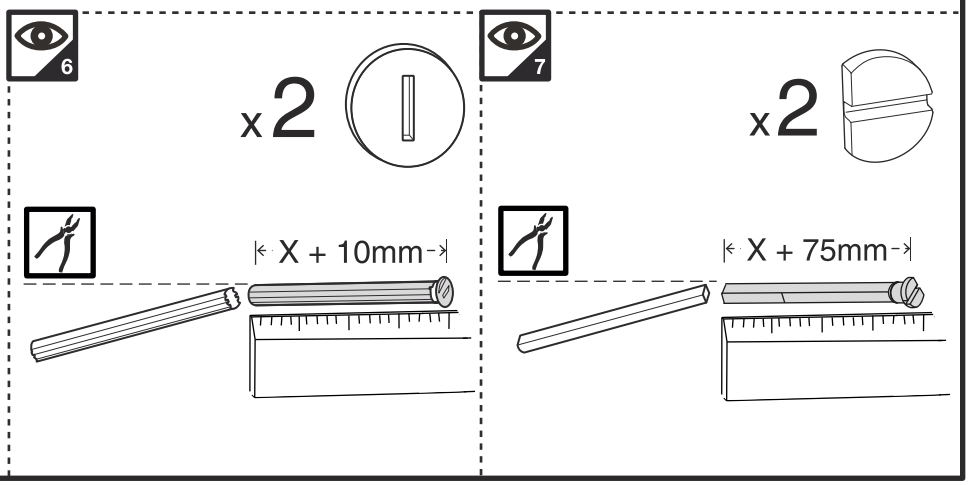

5

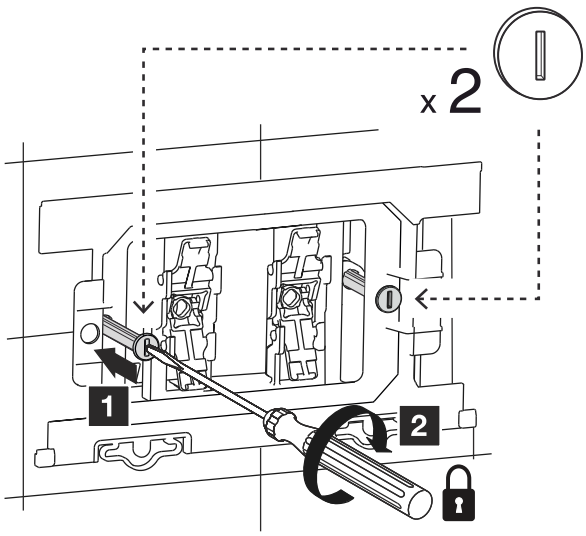

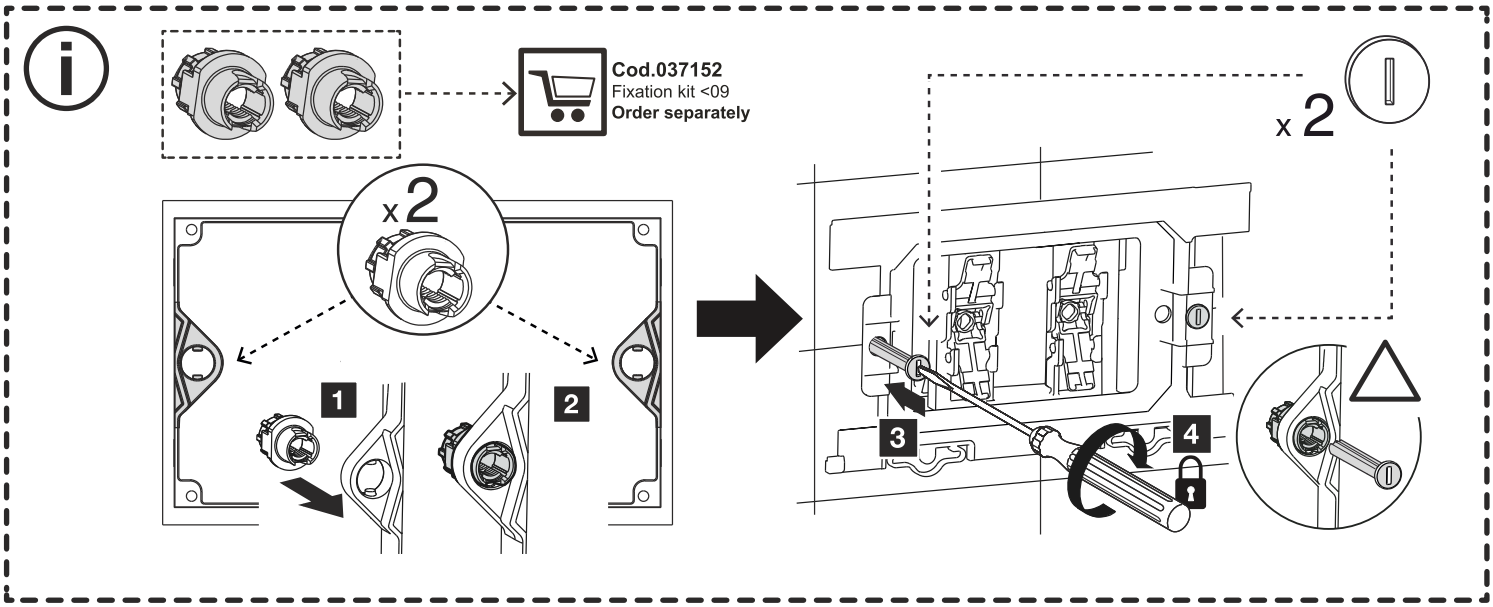
Cod.037152
Fixation kit <09
Order separately
x 2
1
2
x 2
3
4

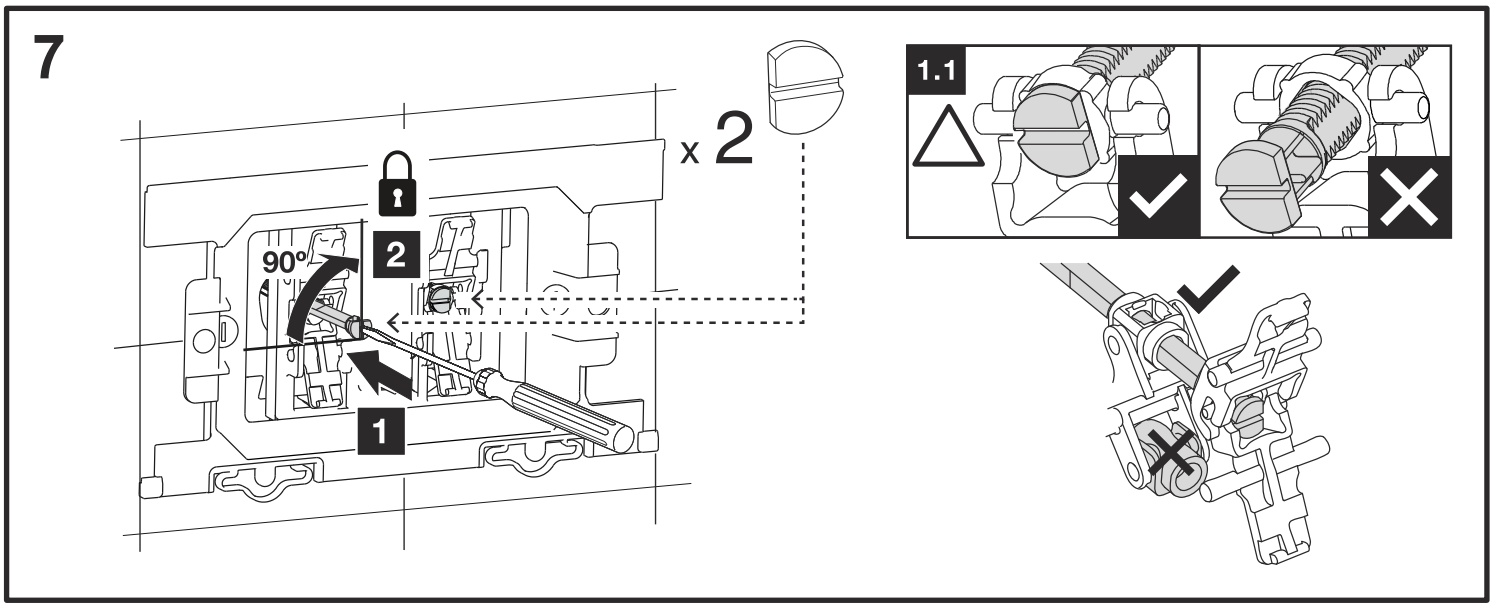
7
x 2
90°
2
1
1.1

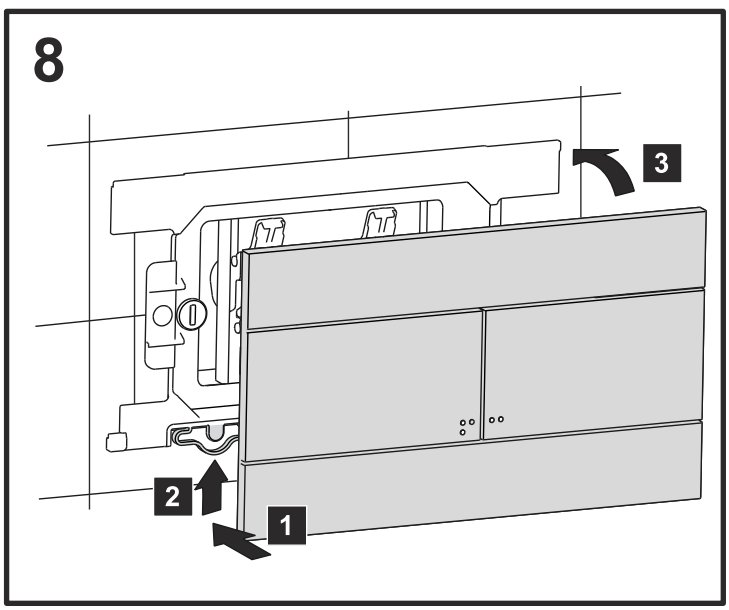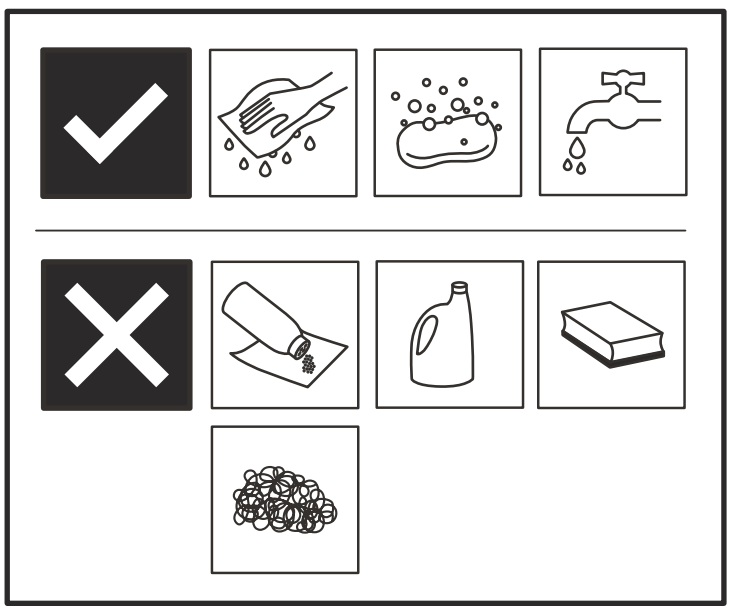
8
3
2
1