Dimensions Bati 33000

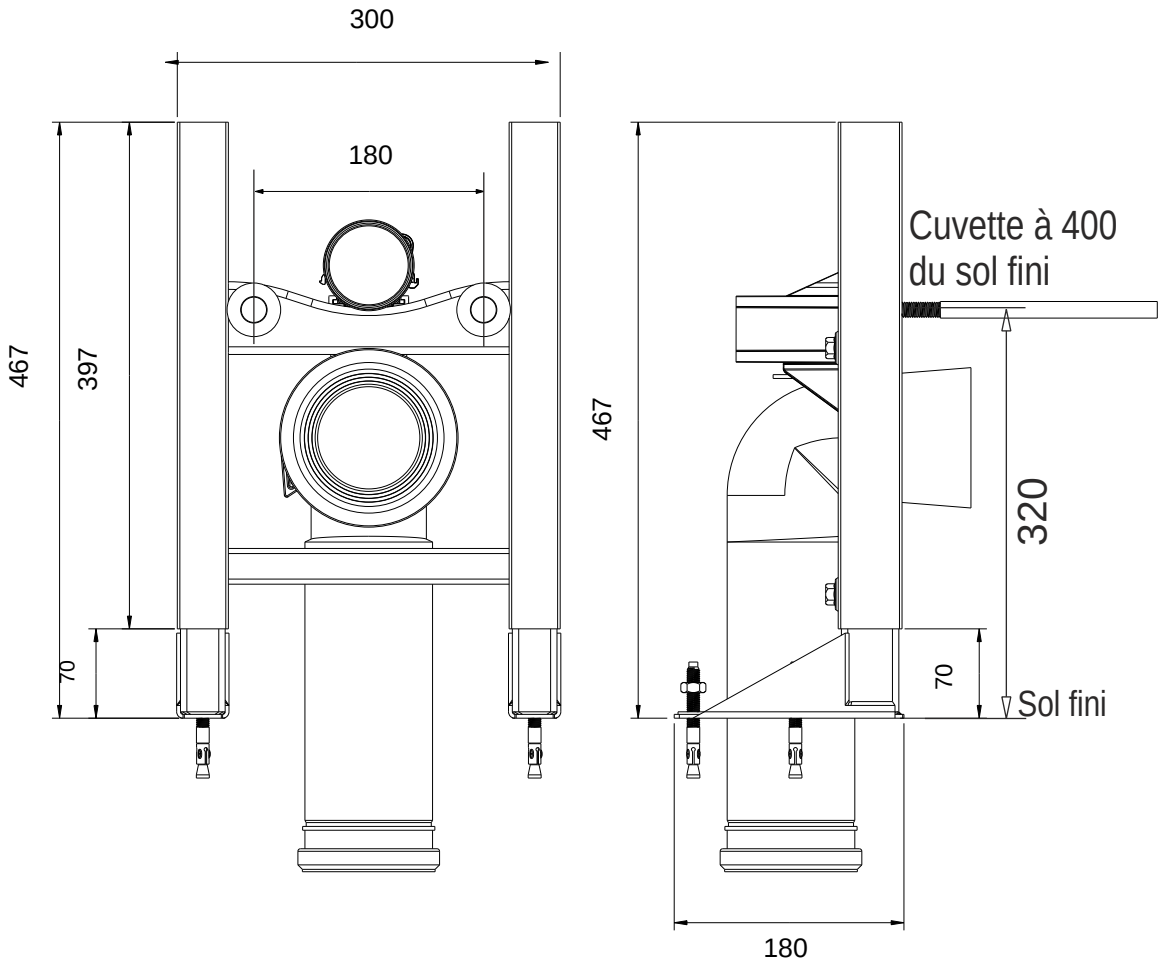

REGIPLAST